ALLIANCE™ CORPORATION
THE POWER OF BEING CONNECTED.

Wireless IN-BUILDING

ALLIANCE™ CORPORATION
THE POWER OF BEING CONNECTED.

We Distribute Solutions for In-Building Wireless & ERRCS Public Safety Signal Enhancement

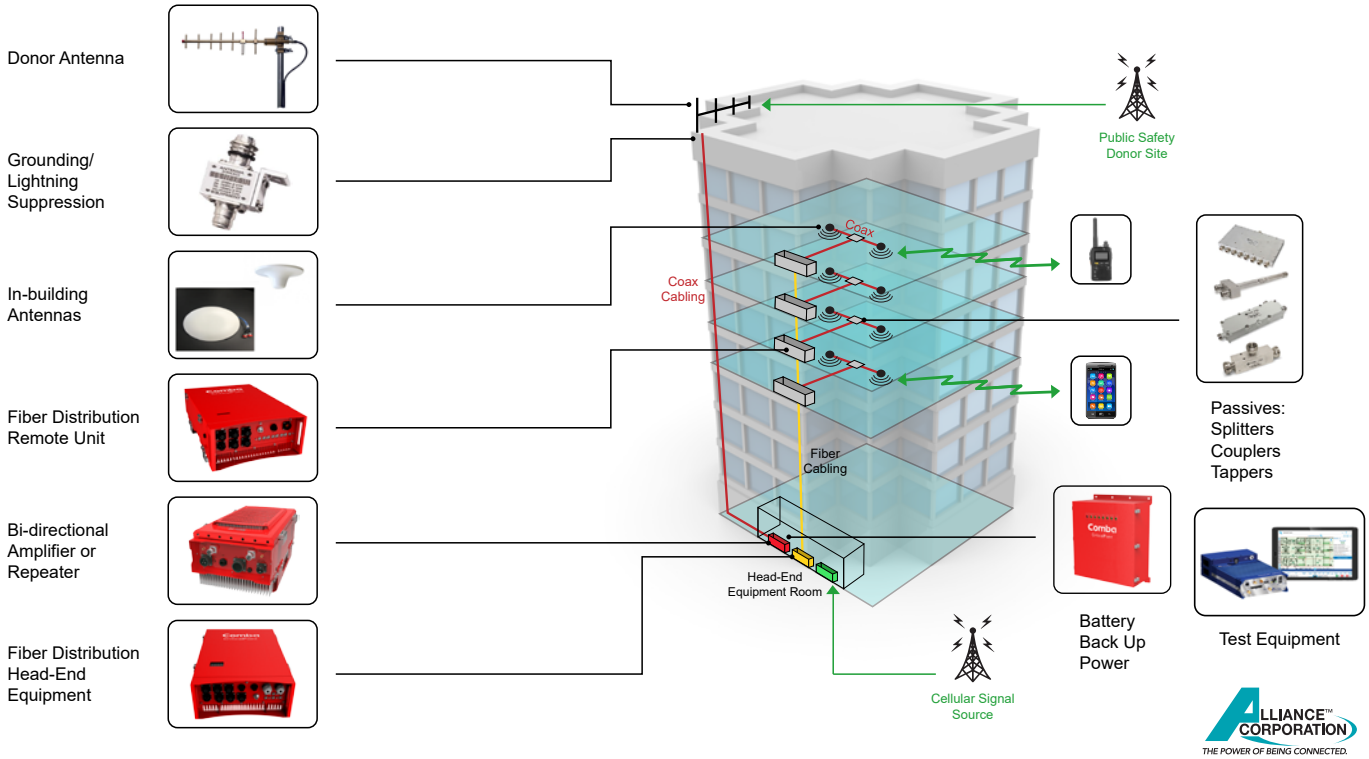

SAFER BUILDINGS COALITION™ Member

www.alliancecomm.com 1-888-821-4797 sales@alliancecomm.com

IN-BUILDING

Solutions for In-Building Wireless & ERRCS Signal Enhancement

ACTIVE DAS

Comba
ADRF
Fiplex
SOLiD
JMA
Cel-Fi by Nextivity

ANTENNAS

Galtronics
Comba
Westell
Wireless Supply
Laird
ADRF

REPEATERS/ BDAs

Comba
Westell
Fiplex
ADRF
GWAVE

CABLING

RFS
American Fire Wire
Wireless Supply
Prysmian
Times Microwave
Trilogy

SPLITTERS, COUPLERS & COMBINERS

Microlab
Comba
Westell
Fiplex
Wireless Supply
RF Industries

BACKUP POWER

Newmar Power
Alpha Technologies
Comba
Westell
Fiplex

JUMPERS

RF Industries
Wireless Supply
Times Microwave

PROTECTION & GROUNDING

Polyphaser
Times Microwave
AC-Line

TEST EQUIPMENT

PC TEL

www.alliancecomm.com 1-888-821-4797 sales@alliancecomm.com

Feb 2022